Proposed Solution Q No 1 (AI)

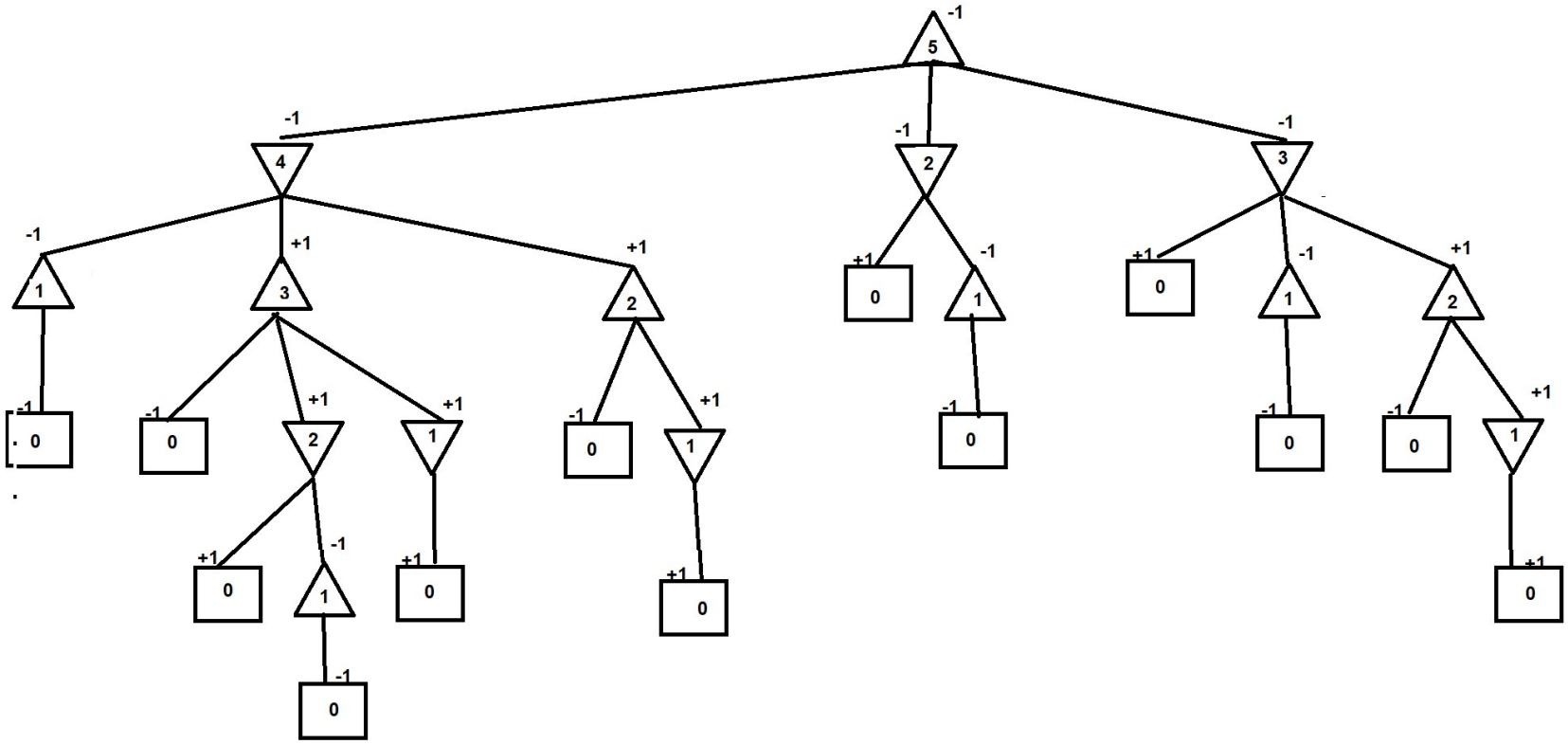

Marks

1. Correct Tree (5 Marks)
2. Correct leaf node values (2 Marks)
3. Correct minimax vales of non-leaf nodes (2 Marks)
4. Correct Move Selected (Clearly mention which move is selected. Here all move have equal values so any of these moves can be selected

Question No 2 Part a and b
in solution (F1 = S1 , F2 = S2 , E1 = Z1 , E2 = Z2)

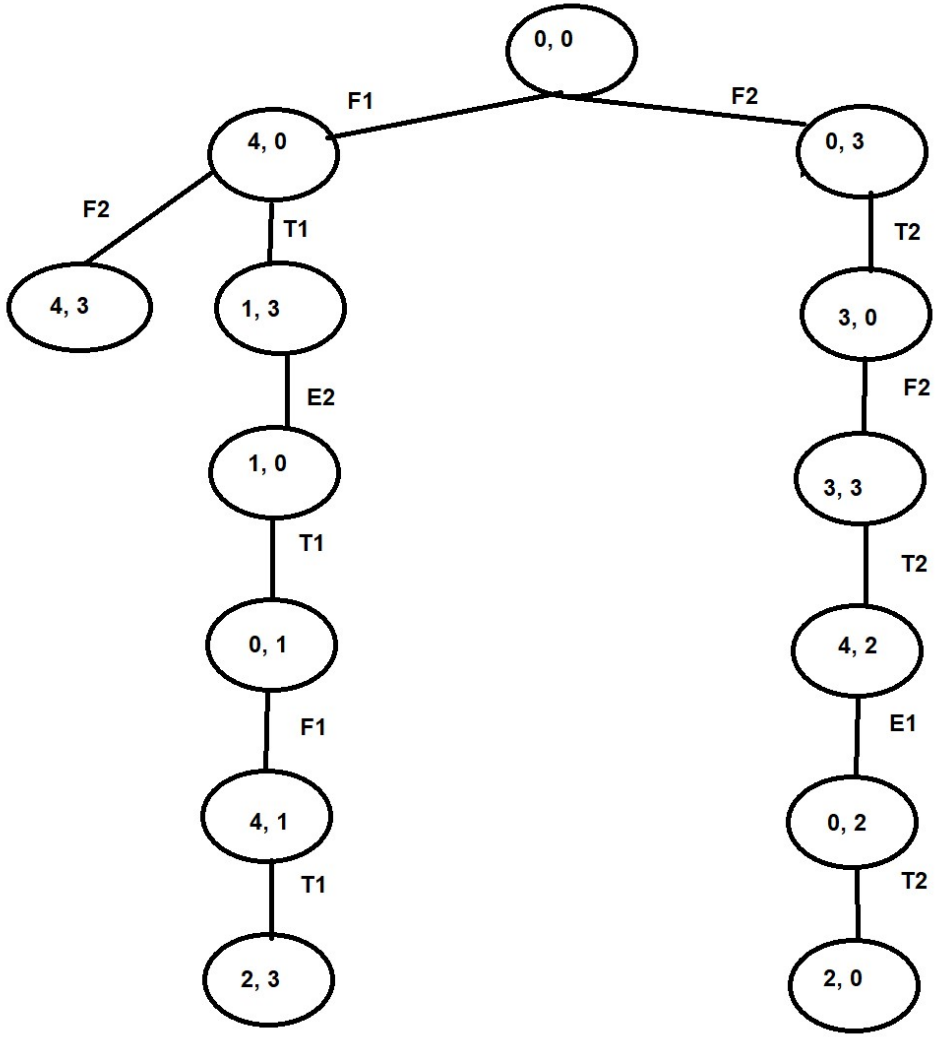

Order of nodes at level 2 can be slightly different with state (4, 3) as a child of state (0, 3)

Minimum and maximum number of nodes expanded

Two acceptable answers are
12 and 13 OR 11 and 12

Depending on when the BFS search is terminated i.e. when the goal comes out of queue or when it is generated.

Part b)
Minimum nodes expanded by DFS is 6 i.e. nodes on the shortest path will be expanded by some implementation of DFS

Question No 2 Part c and d

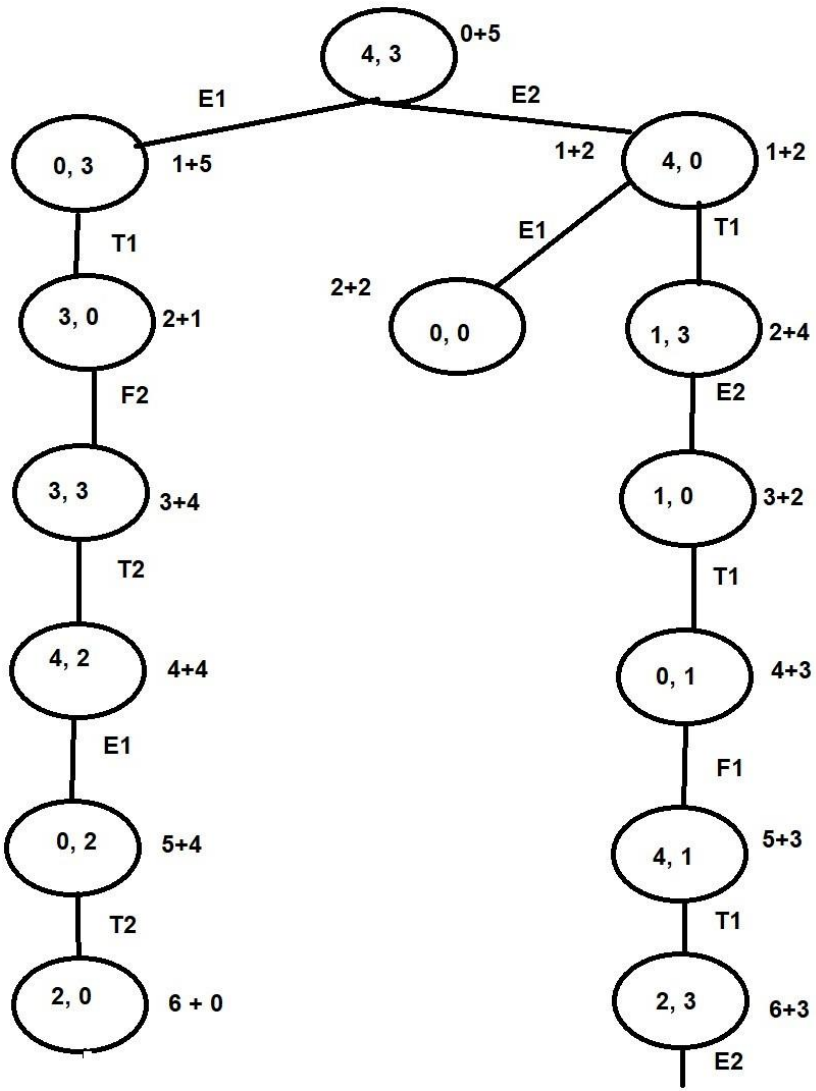

Part c)

Order or node expension can be slightly different depending on the tie braking order

However the solution Found will be

E_1 T_2 F_2 T_2 E_1 T_2

Nodes in the Queue

Two possibilities

1. Node (2, 3) with cost 6+3 will be in the queue
2. Queue will be empth if the node (2,3) is processesed before node(0, 2)

Part d)

This heuristic is NOT admissible for example the heuristic value of (0,2) is 4 while it is one move away from the goal (2,0) in this case. Therefore the heuristic function overestimates the actual cost and is not admissible